为精密而生
BORN FOR PRECISION





· 两列圆锥滚子轴承，能提供更大的轴向力，使用于冲击力比较大的行业
· Two rows of tapered roller bearings, which provide greater axial force, are used in high-impact industries.



· 优化的一体式齿圈设计 保证最合理刚性
· Optimized one-piece gear design ensures optimum rigidity



· 输出轴双支撑结构保证轴向零窜动
· The output shaft double support structure ensures zero axial channeling

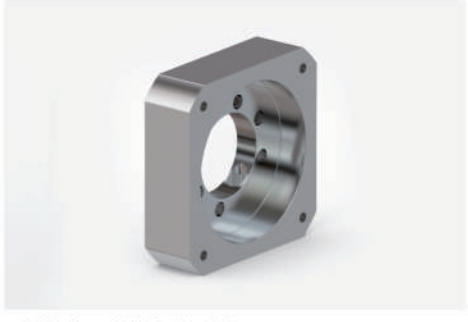

· 高精度一体化角块系统
· High precision integrated corner block system

FKFH系列

FKFH	060	010	P1	S1
系列	型号	减速比	背隙	背隙
FKFH	060	单级	单级	S_1带键
	075	3,4,5,7,8,10	PS:1 P0:2	S_2光轴
	100	双级	P1:3 P2:5	
	142	15,20,25,30	双级	
	180	35,40,50,70	PS:2 P0:3	
	210	80,100	P1:5 P2:7	

马达型号:马达制造及型号　　通用范例:FKFH-060-010-P1/SIEMENS 1FT6 041-4AF71

订货须知

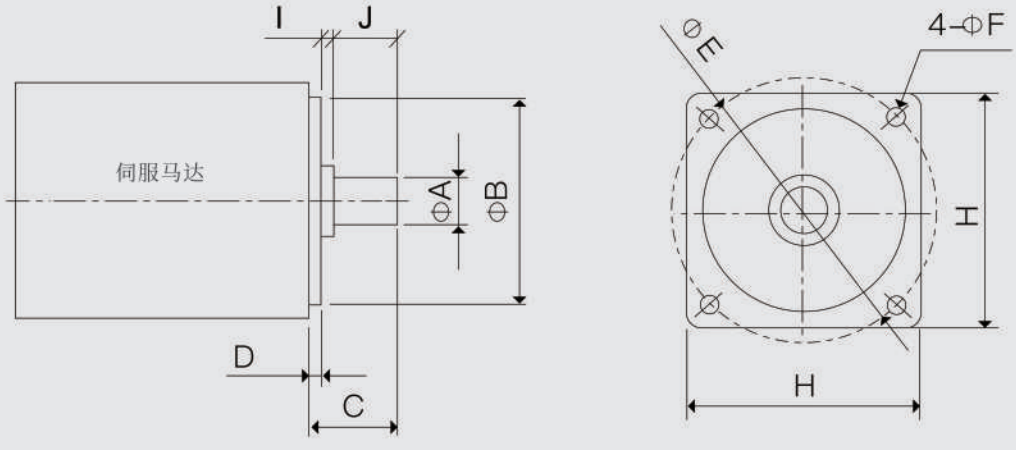

- 机种、型号、马力
- 减速比或每分钟回转数
- 荷重量及连接方式
- 数量及被安排的机械名称
- 入力方式和入力转速
- 马达厂牌型号或法兰及马达轴尺寸

A	B	C	D	E	F	H	I	J

行星减速机订购编号

	—		—		—		—		—	

如何选用减速机

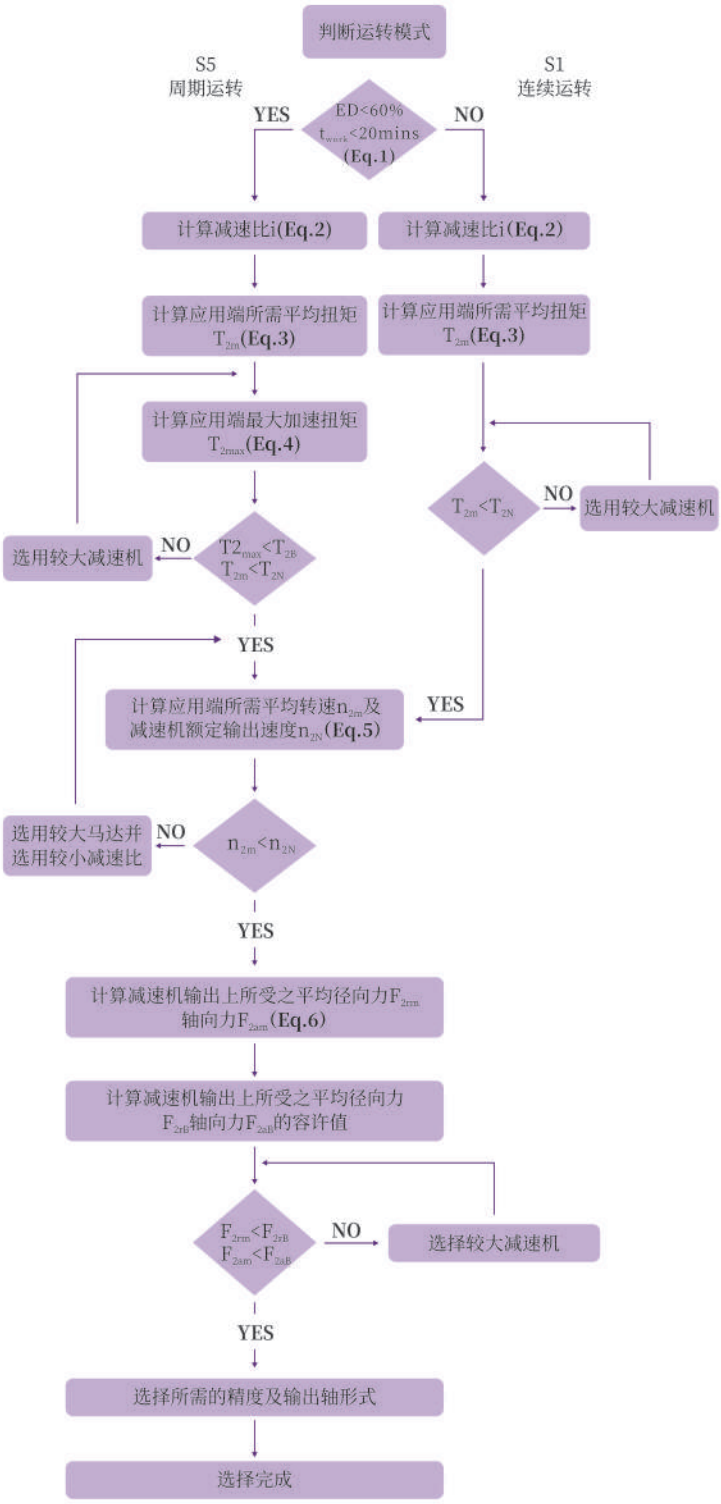

S5周期运转之建议事项

一般的应用惯量须符合以下公式:

$$\frac{J_L}{i^2} \leqslant 4\times J_m$$

J_L 负载惯量

最适当的应用惯量须符合以下公式:

$$\frac{J_L}{i^2} \cong Jm$$

J_m 马达惯量

应用端运动模式

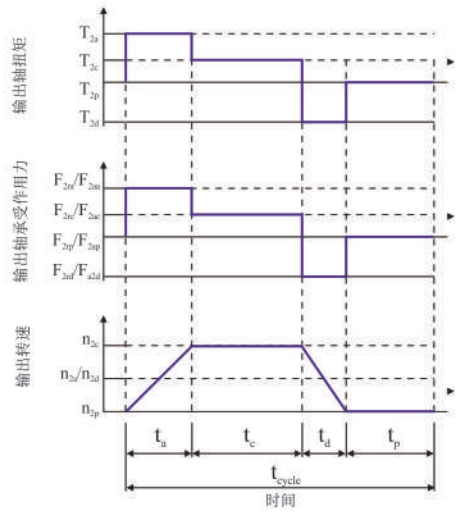

1.ED = $\frac{t_a+t_c+t_d}{t_{cycle}} \times 100\%, t_{work} = t_a+t_c+t_d$

下标说明: a.加速, c.等速,
b.减速, p.停止 **(Eq.1)**

2.I ≦ $\frac{n_m}{n_{work}}$

n_m 马达输出速度
n_{work} 实际应用速度 **(Eq.2)**

3. $T_{2m} = \sqrt[3]{\frac{n_{2a}\times t_a\times T_{2a}^3+n_{2c}\times t_c\times T_{2a}^3+n_{2d}\times t_d\times T_{2d}^3}{n_{2a}\times t_a+n_{2c}\times t_c+n_{2d}\times t_d}}$

(Eq.3)

4. $T_{2max} = T_{mB}\times i\times k_s\times \eta$

K_s 负载系数

K_s	周期次数/小时
1.0	0 ~ 1,000
1.1	1,000 ~ 1,500
1.3	1,500 ~ 2,000
1.6	2,000 ~ 3,000
1.8	3,000 ~ 5,000

T_{mB} 马达最大输出扭矩
η 减速机运转效率 **(Eq.4)**

5. $n_{2a} = n_{2d} = \frac{1}{2}\times n_{2c}$

$n_{2m} = \frac{n_{2a}\times t_a+n_{2c}\times t_c+n_{2d}\times t_d}{t_a+t_c+t_d}$

$n_{2N} = \frac{n_{1N}}{I}$ **(Eq.5)**

6. $F_{2rm} = \sqrt[3]{\frac{n_{2a}\times t_a\times F_{2rm}^3+n_{2c}\times t_c\times F_{2rc}^3+n_{2d}\times t_d\times F_{2rd}^3}{n_{2a}\times t_a+n_{2c}\times t_c+n_{2d}\times t_d}}$

$F_{2am} = \sqrt[3]{\frac{n_{2a}\times t_a\times F_{2am}^3+n_{2c}\times t_c\times F_{2ac}^3+n_{2d}\times t_d\times F_{2ad}^3}{n_{2a}\times t_a+n_{2c}\times t_c+n_{2d}\times t_d}}$

(Eq.6)

FKFH SERIES

FKFH	060	010	P1	S1
SERIES	MODEL	RATIO	BACK LASH	BACK LASH
FKFH	060	One stage	One stage	S1 With key
	075	3,4,5,7,8,10	PS:1 P0:2	S2 Smooth axis
	100	Double stage	P1:3 P2:5	
	142	15,20,25,30	Double stage	
	180	35,40,50,70	PS:2 P0:3	
	210	80,100	P1:5 P2:7	

MOTOR MODEL: MOTOR MANUFACTURING AND MODEL
GENERAL PARADIGM：FKBH-060-010-P1/SIEMENS 1FT6 041-4AF71

NOTE FOR ORDERING

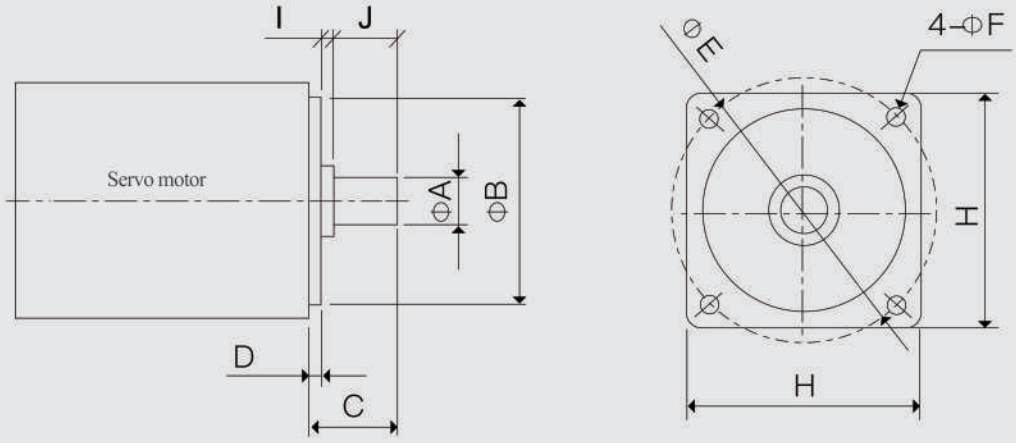

- brand, model, power
- ratio or rpm
- load weight and connection mode
- quantity and designated mechanical name
- input mode and input shaft
- motor brand/model or flange and motor shaft size

A	B	C	D	E	F	H	I	J

Planetary reducer ordering number

	—		—		—		—	

HOW TO SELECT A REDUCER

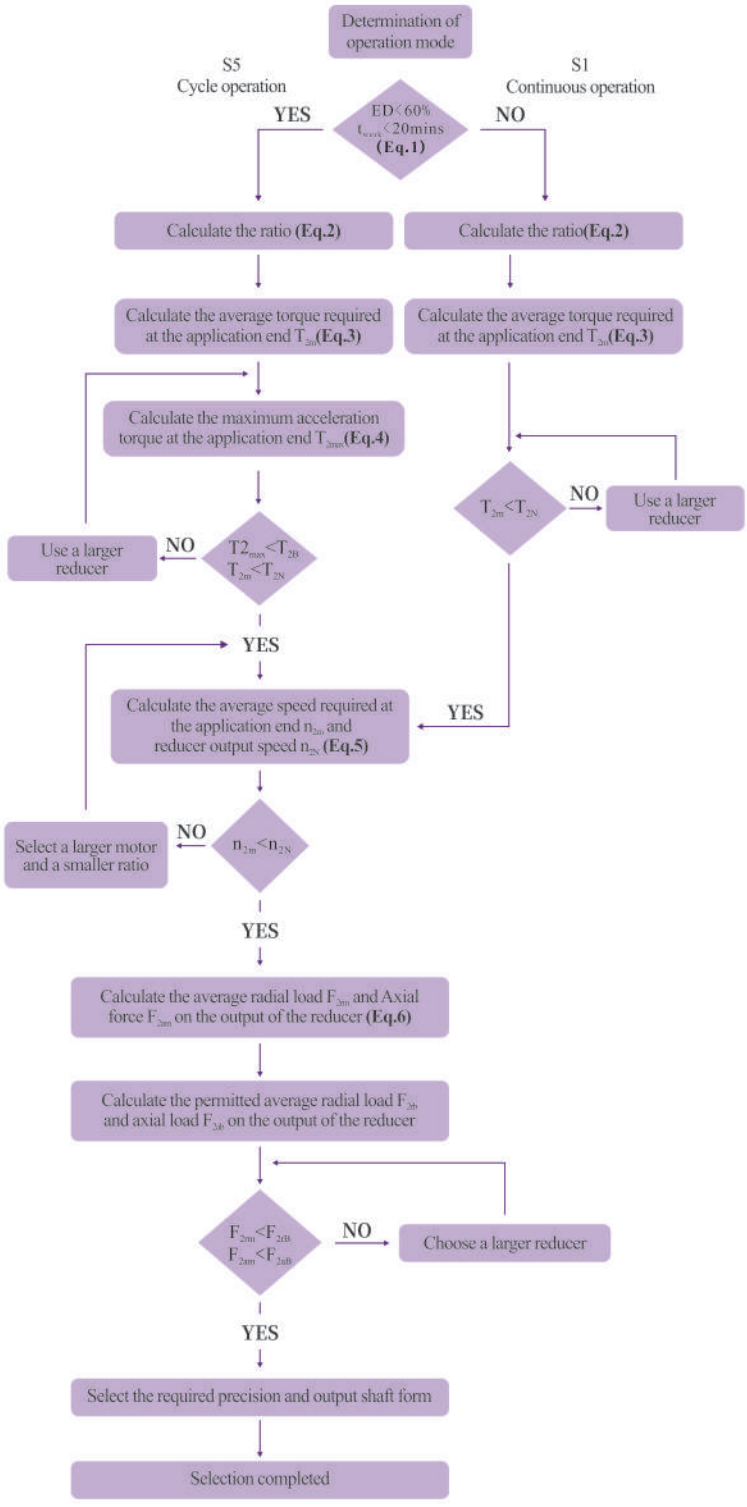

Suggestions for S5 cycle operation

The general applied inertia must conform to the following formula:

$$\frac{J_L}{i^2} \leqslant 4 \times J_m$$

J_L Load inertia

The most appropriate application inertia must conform to the following formula:

$$\frac{J_L}{i^2} \backsimeq J_m$$

J_m Motor inertia

MOTION MODE AT THE APPLICATION END

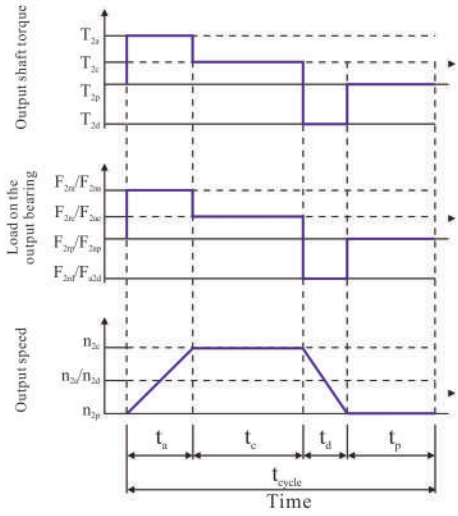

1.ED = $\frac{t_a+t_c+t_d}{t_{cycle}} \times 100\%, t_{work} = t_a+t_c+t_d$

Subscript description:
a. acceleration, c. constant speed,
b. deceleration, p. stop

(Eq.1)

2.I $\backsimeq$ $\frac{n_m}{n_{work}}$

n_m Motor output speed

n_{work} Actual application speed

(Eq.2)

3. $T_{2m} = \sqrt[3]{\frac{n_{2a} \times t_a \times T_{2a}^3 + n_{2c} \times t_c \times T_{2a}^3 + n_{2d} \times t_d \times T_{2d}^3}{n_{2a} \times t_a + n_{2c} \times t_c + n_{2d} \times t_d}}$

(Eq.3)

4. $T_{2max} = T_{mB} \times i \times k_s \times \eta$

K_s Load factor

Ks	Cycles/hour
1.0	0 ~ 1,000
1.1	1,000 ~ 1,500
1.3	1,500 ~ 2,000
1.6	2,000 ~ 3,000
1.8	3,000 ~ 5,000

T_{mB} Motor maximum output torque

η Reducer operating efficiency

(Eq.4)

5. $n_{2a} = n_{2d} = \frac{1}{2} \times n_{2c}$

$n_{2m} = \frac{n_{2a} \times t_a + n_{2c} \times t_c + n_{2d} \times t_d}{t_a+t_c+t_d}$

$n_{2N} = \frac{n_{1N}}{I}$

(Eq.5)

6. $F_{2rm} = \sqrt[3]{\frac{n_{2a} \times t_a \times F_{2ra}^3 + n_{2c} \times t_c \times F_{2rc}^3 + n_{2d} \times t_d \times F_{2rd}^3}{n_{2a} \times t_a + n_{2c} \times t_c + n_{2d} \times t_d}}$

$F_{2am} = \sqrt[3]{\frac{n_{2a} \times t_a \times F_{2aa}^3 + n_{2c} \times t_c \times F_{2ac}^3 + n_{2d} \times t_d \times F_{2ad}^3}{n_{2a} \times t_a + n_{2c} \times t_c + n_{2d} \times t_d}}$

(Eq.6)

减速机性能资料 REDUCER PERFORMANCE DATA

FKFH060				单级/One-stage							
速比[1] Speed ratio		i		3	4	5	6	7	8	9	10
额定输出力矩(n_{1N}) Rated output torque		T_{2N}	Nm	55	50	60	55	50	45	40	40
紧急制动力矩 Emergency braking torque (在减速机工作寿命内允许1000次) (1000 times during the working life of the reducer)		T_{2NOT}	Nm	3倍额定输出力矩/3 Times rated output torque							
额定输入转速 (T2n, 20℃环境温度) Rated input speed (T2n, 20 ℃ ambient temperature)		n_{1N}	rpm	4000							
最大输入转速 Maximum input speed		n_{1max}	rpm	8000							
空载力矩 (n1=3000rpm, 20℃环境温度) No-load torque (n1 = 3000 RPM, 20 ℃ambient temperature)		T_{012}	Nm	0.9	0.8	0.8	0.7	0.6	0.5	0.5	0.4
回程间隙 PS Backslash PS		j_t	Arcmin	⩽1							
回程间隙 P0 Backslash P0		j_t	Arcmin	⩽2							
回程间隙 P1 Backslash P1		j_t	Arcmin	⩽3							
回程间隙 P2 Backslash P2		j_t	Arcmin	⩽5							
扭转刚度 Torsional stiffness		C_{t21}	Nm/Arcmin	5							
最大轴向力[2] Maximum axial force		F_{2AMax}	N	2100							
最大径向力[2] Maximum radial force		F_{2RMax}	N	2550							
工作效率 Work efficiency		η	%	97							
工作寿命[3] Service life		L_h	h	30000							
噪音 (i=10和n1=3000rpm, 空载) Noise (i =10 and n1=3000rpm, no load)		L_{PA}	DB(A)	⩽58							
重量 Weight		m	Kg	1.3							
安装方向 Installation direction				任意方向/Any direction							
使用温度[4] Operating temperature		°C		-10~90							
润滑方式 Lubrication method				终生润滑/Lifetime lubrication							
防护等级 Protection level				IP65							
转动惯量 Moment of inertia 按减速机输入直径(mm) Input diameter based on the reducer (mm)	11	J_1	$Kgcm^2$	0.25	0.2	0.2	0.15	0.13	0.12	0.1	0.1
	14	J_1	$Kgcm^2$	0.28	0.25	0.25	0.22	0.18	0.17	0.15	0.14
	19	J_1	$Kgcm^2$	0.65	0.6	0.55	0.55	0.52	0.5	0.5	0.48

1.可选其他减速比
2.输出轴中心点
3.连续运转时，使用寿命为10000h
4.对温度有特殊要求请与法斯顿联系

1.Optional other ratio
2.Output shaft center point
3.Service life of 10000h in continuous operation
4.For special requirements on temperature, please contact FASTON

减速机性能资料 REDUCER PERFORMANCE DATA

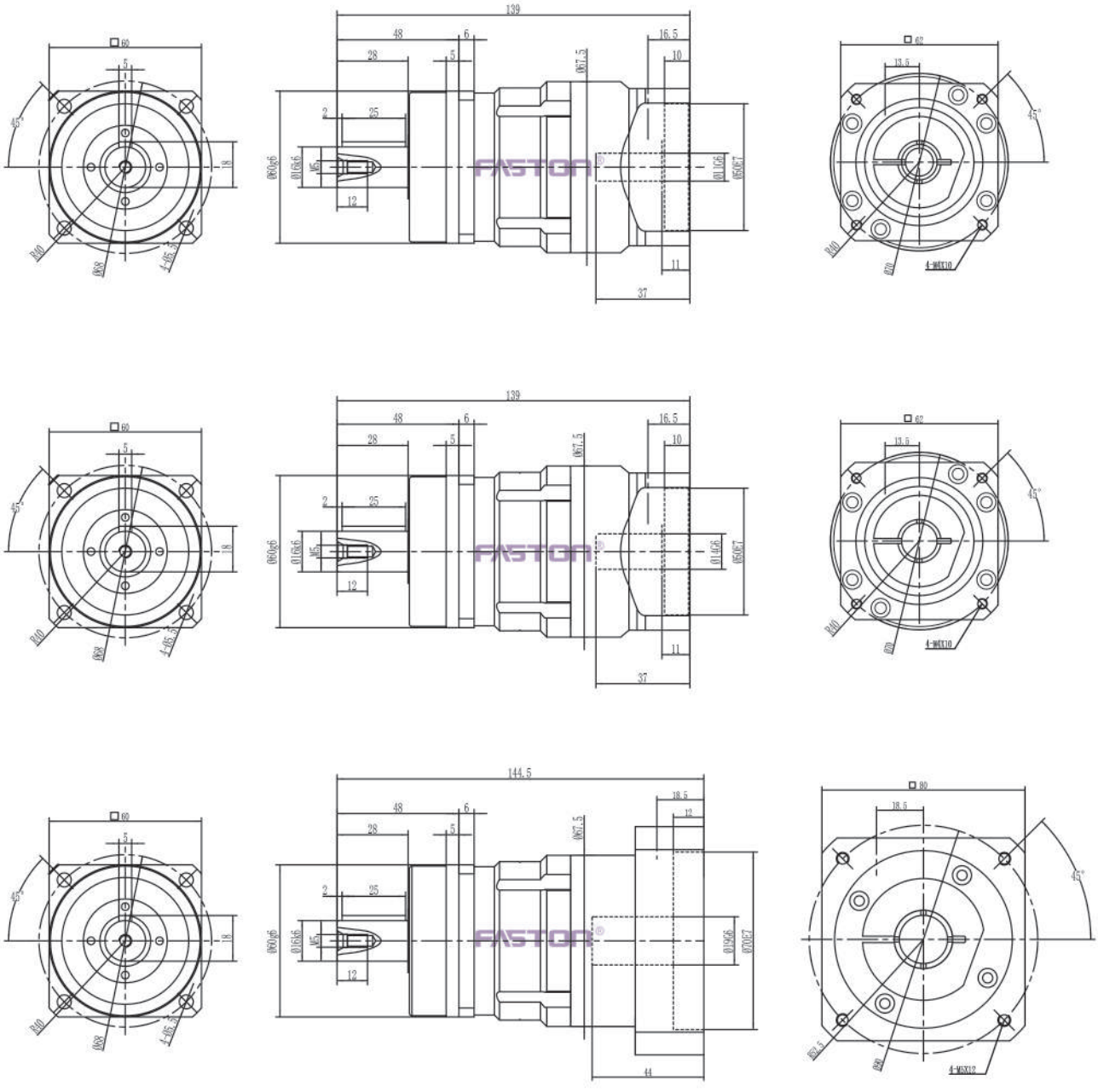

(1) 请参照马达轴径尺寸
(2) 马达轴最长长度, 如有特殊的马达轴尺寸, 请与法斯顿联络
(3) 减速机输入端尺寸, 依马达的法兰面而定

*如无适合的尺寸, 请与法斯顿联系

(1) Please refer to the motor shaft diameter
(2) Motor shaft length, for special motor shaft size, please contact FASTON
(3) Reducer input size, depending on the flange surface of the motor

* If no suitable size available, please contact FASTON

减速机性能资料 REDUCER PERFORMANCE DATA

FKFH060				双级/Double-stage								
速比[1] Speed ratio		i		12	16	20	25	35	40	50	70	100
额定输出力矩(n_{1N}) Rated output torque		T_{2N}	Nm	55	50	50	60	50	50	55	50	40
紧急制动力矩 Emergency braking torque (在减速机工作寿命内允许1000次) (1000 times during the working life of the reducer)		T_{2NOT}	Nm	3倍额定输出力矩/3 Times rated output torque								
额定输入转速 (T2n, 20℃环境温度) Rated input speed (T2n, 20 ℃ ambient temperature)		n_{1N}	rpm	4000								
最大输入转速 Maximum input speed		n_{1max}	rpm	8000								
空载力矩 (n1=3000rpm, 20℃环境温度) No-load torque (n1 = 3000 RPM, 20 ℃ambient temperature)		T_{012}	Nm	0.6	0.6	0.55	0.5	0.5	0.4	0.4	0.35	0.3
回程间隙 PS Backslash PS		j_t	Arcmin	⩽2								
回程间隙 P0 Backslash P0		j_t	Arcmin	⩽3								
回程间隙 P1 Backslash P1		j_t	Arcmin	⩽5								
回程间隙 P2 Backslash P2		j_t	Arcmin	⩽7								
扭转刚度 Torsional stiffness		C_{t21}	Nm/Arcmin	5								
最大轴向力[2] Maximum axial force		F_{2AMax}	N	3400								
最大径向力[2] Maximum radial force		F_{2RMax}	N	4200								
工作效率 Work efficiency		η	%	94								
工作寿命[3] Service life		L_h	h	30000								
噪音 (i=10和n1=3000rpm, 空载) Noise (i =10 and n1=3000rpm, no load)		L_{PA}	DB(A)	⩽58								
重量 Weight		m	Kg	1.8								
安装方向 Installation direction				任意方向/Any direction								
使用温度[4] Operating temperature		°C		-10~90								
润滑方式 Lubrication method				终生润滑/Lifetime lubrication								
防护等级 Protection level				IP65								
转动惯量 Moment of inertia 按减速机输入直径(mm) Input diameter based on the reducer (mm)	8	J_1	$Kgcm^2$	0.1	0.1	0.09	0.08	0.08	0.08	0.08	0.08	0.08
	11	J_1	$Kgcm^2$	0.17	0.17	0.17	0.16	0.16	0.16	0.16	0.16	0.15
	14	J_1	$Kgcm^2$	0.18	0.18	0.16	0.15	0.15	0.15	0.15	0.14	0.14

1.可选其他减速比
2.输出轴中心点
3.连续运转时，使用寿命为10000h
4.对温度有特殊要求请与法斯顿联系

1.Optional other ratio
2.Output shaft center point
3.Service life of 10000h in continuous operation
4.For special requirements on temperature, please contact FASTON

减速机性能资料 REDUCER PERFORMANCE DATA

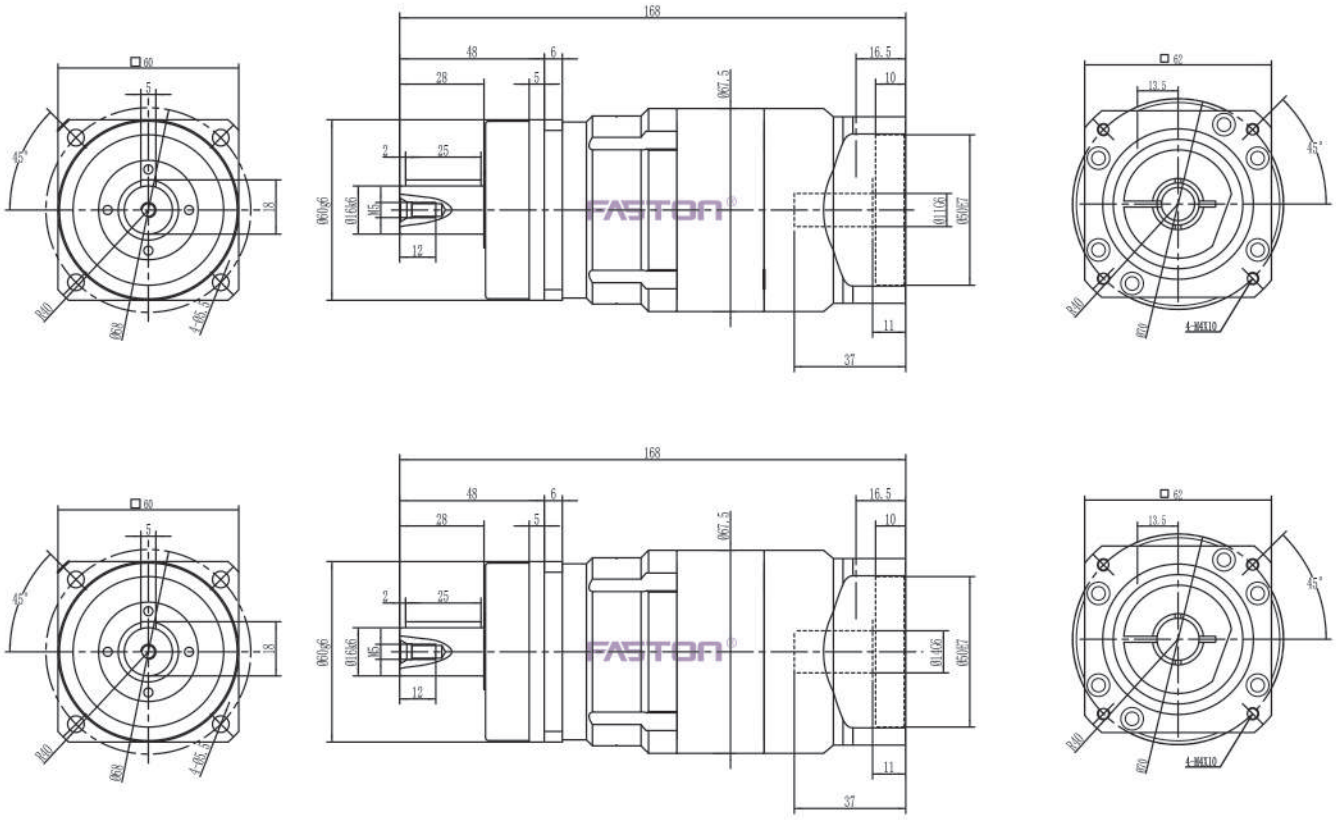

(1) 请参照马达轴径尺寸
(2) 马达轴最长长度, 如有特殊的马达轴尺寸, 请与法斯顿联络
(3) 减速机输入端尺寸, 依马达的法兰面而定

*如无适合的尺寸, 请与法斯顿联系

(1) Please refer to the motor shaft diameter
(2) Motor shaft length, for special motor shaft size, please contact FASTON
(3) Reducer input size, depending on the flange surface of the motor

* If no suitable size available, please contact FASTON

减速机性能资料 REDUCER PERFORMANCE DATA

FKFH075				单级/One-stage							
速比[1] Speed ratio		i		3	4	5	6	7	8	9	10
额定输出力矩(n_{1N}) Rated output torque		T_{2N}	Nm	130	140	160	140	140	120	100	100
紧急制动力矩 Emergency braking torque (在减速机工作寿命内允许1000次) (1000 times during the working life of the reducer)		T_{2NOT}	Nm	3倍额定输出力矩/3 Times rated output torque							
额定输入转速 (T2n, 20℃环境温度) Rated input speed (T2n, 20 ℃ ambient temperature)		n_{1N}	rpm	3000							
最大输入转速 Maximum input speed		n_{1max}	rpm	6000							
空载力矩 (n1=3000rpm, 20℃环境温度) No-load torque (n1 = 3000 RPM, 20 ℃ambient temperature)		T_{012}	Nm	1.8	1.7	1.6	1.5	1.4	1.1	0.8	0.7
回程间隙 PS Backslash PS		j_t	Arcmin	⩽1							
回程间隙 P0 Backslash P0		j_t	Arcmin	⩽2							
回程间隙 P1 Backslash P1		j_t	Arcmin	⩽3							
回程间隙 P2 Backslash P2		j_t	Arcmin	⩽5							
扭转刚度 Torsional stiffness		C_{t21}	Nm/Arcmin	15							
最大轴向力[2] Maximum axial force		F_{2AMax}	N	3400							
最大径向力[2] Maximum radial force		F_{2RMax}	N	4200							
工作效率 Work efficiency		η	%	97							
工作寿命[3] Service life		L_h	h	30000							
噪音 (i=10和n1=3000rpm, 空载) Noise (i =10 and n1=3000rpm, no load)		L_{PA}	DB(A)	⩽60							
重量 Weight		m	Kg	3.9							
安装方向 Installation direction				任意方向/Any direction							
使用温度[4] Operating temperature		°C		-10~90							
润滑方式 Lubrication method				终生润滑/Lifetime lubrication							
防护等级 Protection level				IP65							
转动惯量 Moment of inertia 按减速机输入直径(mm) Input diameter based on the reducer (mm)	19	J_1	$Kgcm^2$	1.3	1.3	1.2	1.1	0.9	0.8	0.7	0.6
	22	J_1	$Kgcm^2$	2.2	2.1	2	2	1.8	1.7	1.5	1.5
	24	J_1	$Kgcm^2$	2.5	2.4	2.3	2.3	2.2	2.2	2.1	2.1

1.可选其他减速比
2.输出轴中心点
3.连续运转时，使用寿命为10000h
4.对温度有特殊要求请与法斯顿联系

1.Optional other ratio
2.Output shaft center point
3.Service life of 10000h in continuous operation
4.For special requirements on temperature, please contact FASTON

减速机性能资料 REDUCER PERFORMANCE DATA

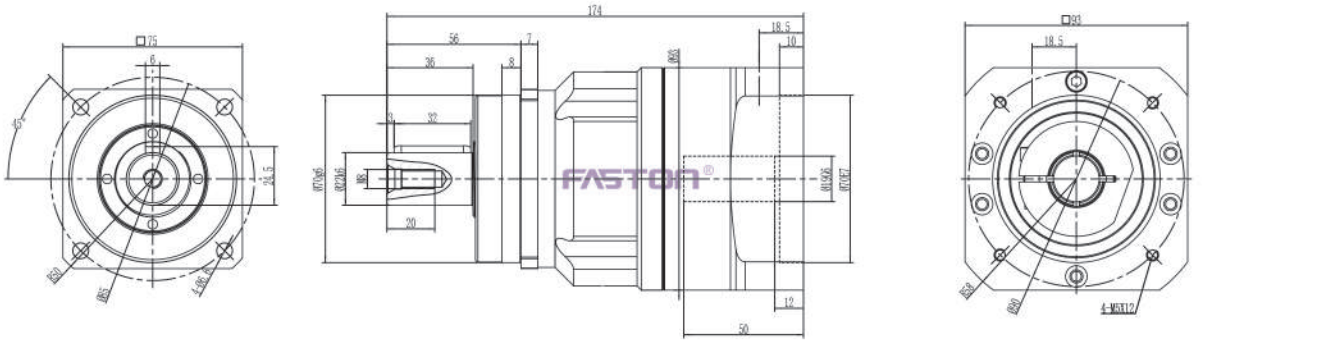

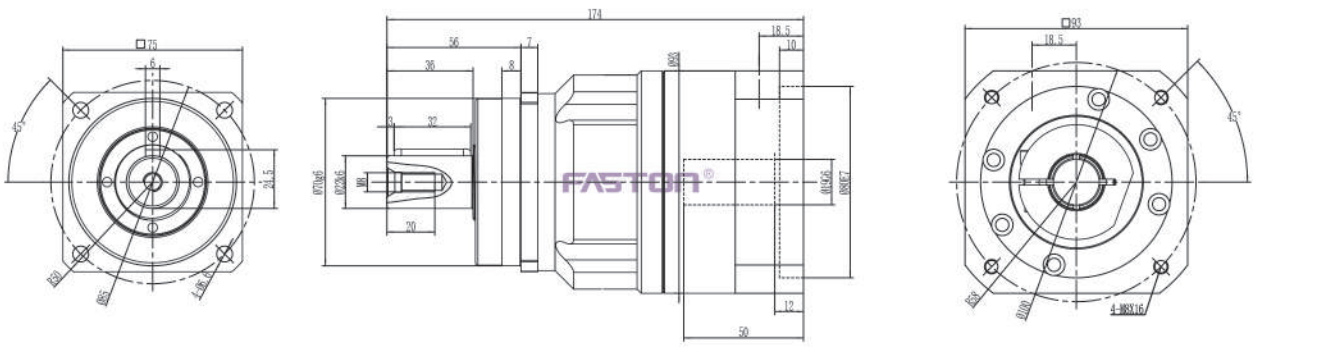

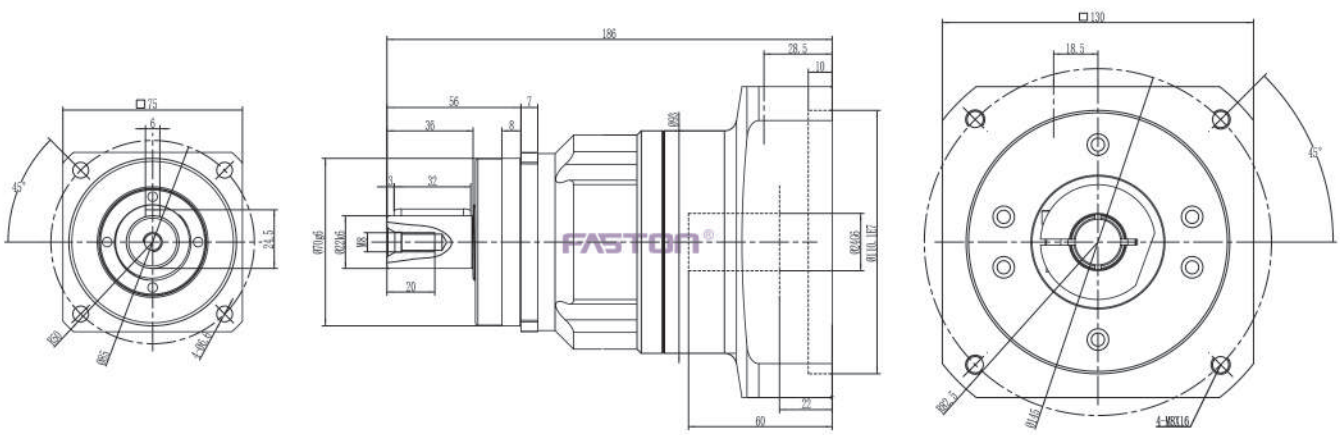

(1) 请参照马达轴径尺寸
(2) 马达轴最长长度, 如有特殊的马达轴尺寸, 请与法斯顿联络
(3) 减速机输入端尺寸, 依马达的法兰面而定

*如无适合的尺寸, 请与法斯顿联系

(1) Please refer to the motor shaft diameter
(2) Motor shaft length, for special motor shaft size, please contact FASTON
(3) Reducer input size, depending on the flange surface of the motor

* If no suitable size available, please contact FASTON

减速机性能资料 REDUCER PERFORMANCE DATA

FKFH075				双级/Double-stage								
速比[1] Speed ratio		i		12	16	20	25	35	40	50	70	100
额定输出力矩(n_{1N}) Rated output torque		T_{2N}	Nm	130	140	140	160	140	140	160	120	100
紧急制动力矩 Emergency braking torque (在减速机工作寿命内允许1000次) (1000 times during the working life of the reducer)		T_{2NOT}	Nm	3倍额定输出力矩/3 Times rated output torque								
额定输入转速 (T2n, 20℃环境温度) Rated input speed (T2n, 20 ℃ ambient temperature)		n_{1N}	rpm	3000								
最大输入转速 Maximum input speed		n_{1max}	rpm	6000								
空载力矩 (n1=3000rpm, 20℃环境温度) No-load torque (n1 = 3000 RPM, 20 ℃ambient temperature)		T_{012}	Nm	0.9	0.8	0.7	0.6	0.5	0.5	0.4	0.3	0.3
回程间隙 PS Backslash PS		j_t	Arcmin	⩽2								
回程间隙 P0 Backslash P0		j_t	Arcmin	⩽3								
回程间隙 P1 Backslash P1		j_t	Arcmin	⩽5								
回程间隙 P2 Backslash P2		j_t	Arcmin	⩽7								
扭转刚度 Torsional stiffness		C_{t21}	Nm/Arcmin	15								
最大轴向力[2] Maximum axial force		F_{2AMax}	N	3400								
最大径向力[2] Maximum radial force		F_{2RMax}	N	4200								
工作效率 Work efficiency		η	%	94								
工作寿命[3] Service life		L_h	h	30000								
噪音 (i=10和n1=3000rpm, 空载) Noise (i =10 and n1=3000rpm, no load)		L_{PA}	DB(A)	⩽60								
重量 Weight		m	Kg	4.6								
安装方向 Installation direction				任意方向/Any direction								
使用温度[4] Operating temperature		°C		-10~90								
润滑方式 Lubrication method				终生润滑/Lifetime lubrication								
防护等级 Protection level				IP65								
转动惯量 Moment of inertia 按减速机输入直径(mm) Input diameter based on the reducer (mm)	14	J_1	$Kgcm^2$	0.25	0.23	0.21	0.2	0.18	0.18	0.18	0.16	0.16
	19	J_1	$Kgcm^2$	0.7	0.7	0.7	0.7	0.7	0.7	0.6	0.5	0.5
	22	J_1	$Kgcm^2$	0.8	0.8	0.7	0.7	0.7	0.7	0.65	0.6	0.6

1.可选其他减速比
2.输出轴中心点
3.连续运转时，使用寿命为10000h
4.对温度有特殊要求请与法斯顿联系

1.Optional other ratio
2.Output shaft center point
3.Service life of 10000h in continuous operation
4.For special requirements on temperature, please contact FASTON

减速机性能资料 REDUCER PERFORMANCE DATA

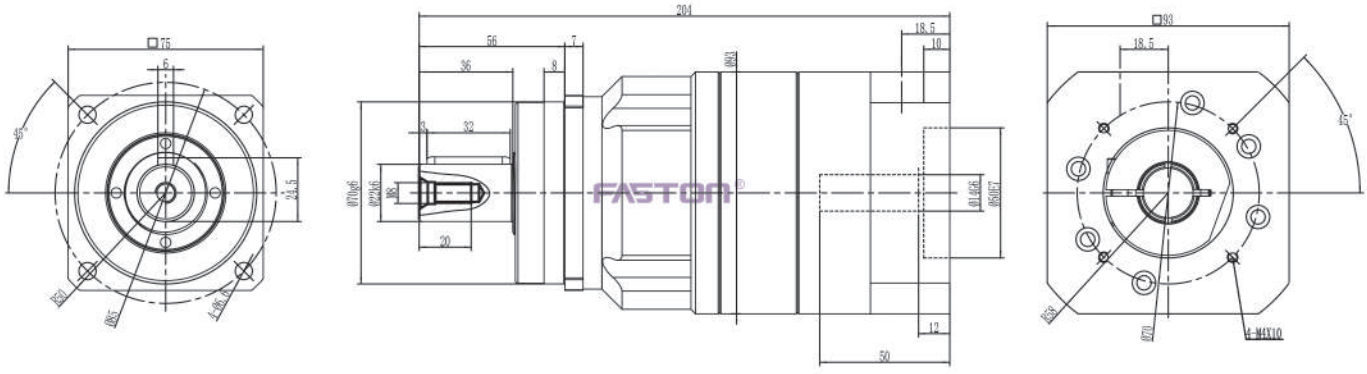

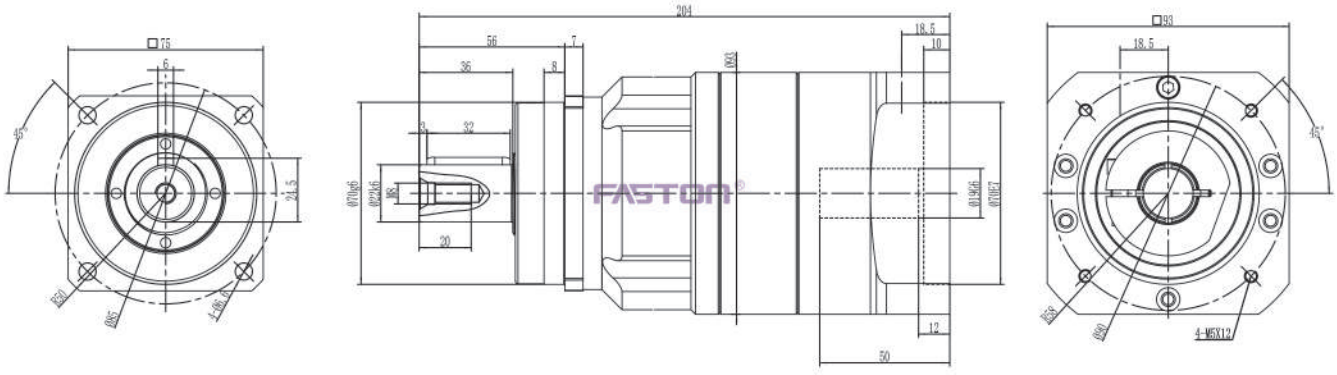

(1) 请参照马达轴径尺寸
(2) 马达轴最长长度, 如有特殊的马达轴尺寸, 请与法斯顿联络
(3) 减速机输入端尺寸, 依马达的法兰面而定

*如无适合的尺寸, 请与法斯顿联系

(1) Please refer to the motor shaft diameter
(2) Motor shaft length, for special motor shaft size, please contact FASTON
(3) Reducer input size, depending on the flange surface of the motor

* If no suitable size available, please contact FASTON

减速机性能资料 REDUCER PERFORMANCE DATA

FKFH100				单级/One-stage							
速比[1] Speed ratio		i		3	4	5	6	7	8	9	10
额定输出力矩(n_{1N}) Rated output torque		T_{2N}	Nm	208	290	330	300	300	260	230	230
紧急制动力矩 Emergency braking torque (在减速机工作寿命内允许1000次) (1000 times during the working life of the reducer)		T_{2NOT}	Nm	3倍额定输出力矩/3 Times rated output torque							
额定输入转速 (T2n, 20℃环境温度) Rated input speed (T2n, 20 ℃ ambient temperature)		n_{1N}	rpm	3000							
最大输入转速 Maximum input speed		n_{1max}	rpm	6000							
空载力矩 (n1=3000rpm, 20℃环境温度) No-load torque (n1 = 3000 RPM, 20 ℃ambient temperature)		T_{012}	Nm	3.6	3	2.7	2.5	2	1.8	1.6	1.5
回程间隙 PS Backslash PS		j_t	Arcmin	⩽1							
回程间隙 P0 Backslash P0		j_t	Arcmin	⩽2							
回程间隙 P1 Backslash P1		j_t	Arcmin	⩽3							
回程间隙 P2 Backslash P2		j_t	Arcmin	⩽5							
扭转刚度 Torsional stiffness		C_{t21}	Nm/Arcmin	25							
最大轴向力[2] Maximum axial force		F_{2AMax}	N	5900							
最大径向力[2] Maximum radial force		F_{2RMax}	N	9200							
工作效率 Work efficiency		η	%	97							
工作寿命[3] Service life		L_h	h	30000							
噪音 (i=10和n1=3000rpm, 空载) Noise (i =10 and n1=3000rpm, no load)		L_{PA}	DB(A)	⩽63							
重量 Weight		m	Kg	8.7							
安装方向 Installation direction				任意方向/Any direction							
使用温度[4] Operating temperature		°C		-10~90							
润滑方式 Lubrication method				终生润滑/Lifetime lubrication							
防护等级 Protection level				IP65							
转动惯量 Moment of inertia 按减速机输入直径(mm) Input diameter based on the reducer (mm)	19	J_1	$Kgcm^2$	3.5	3	2.6	2.2	2	1.8	1.6	1.5
	24	J_1	$Kgcm^2$	4.8	4.6	4.5	4	3.5	3	2.7	2.5
	35	J_1	$Kgcm^2$	11.5	10.5	10	10	9.9	9.9	9.6	9.5

1.可选其他减速比
2.输出轴中心点
3.连续运转时，使用寿命为10000h
4.对温度有特殊要求请与法斯顿联系

1.Optional other ratio
2.Output shaft center point
3.Service life of 10000h in continuous operation
4.For special requirements on temperature, please contact FASTON

减速机性能资料 REDUCER PERFORMANCE DATA

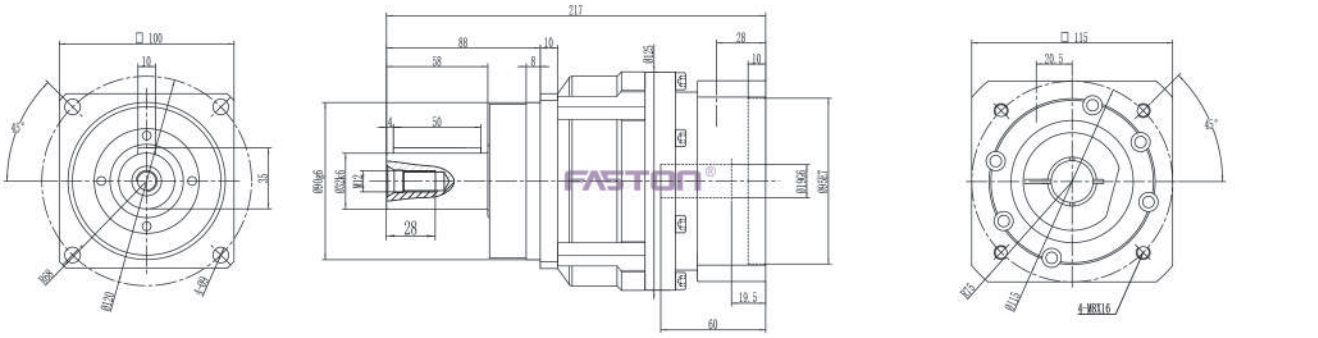

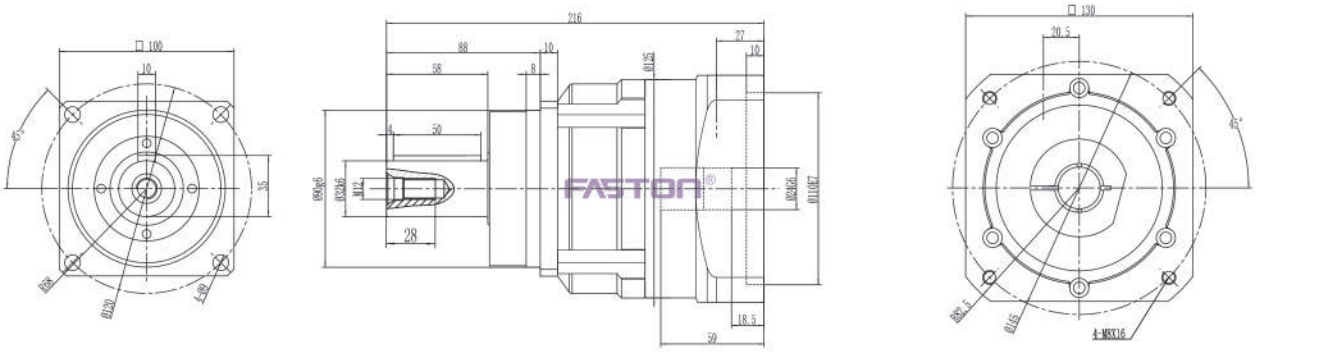

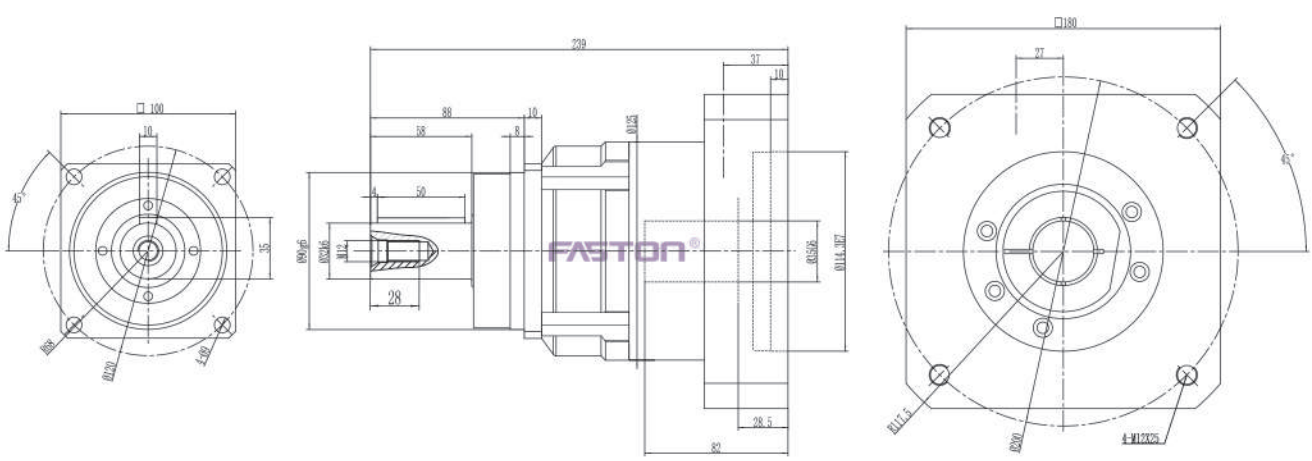

(1) 请参照马达轴径尺寸
(2) 马达轴最长长度, 如有特殊的马达轴尺寸, 请与法斯顿联络
(3) 减速机输入端尺寸, 依马达的法兰面而定

*如无适合的尺寸, 请与法斯顿联系

(1) Please refer to the motor shaft diameter
(2) Motor shaft length, for special motor shaft size, please contact FASTON
(3) Reducer input size, depending on the flange surface of the motor

* If no suitable size available, please contact FASTON

减速机性能资料 REDUCER PERFORMANCE DATA

FKFH100				双级/Double-stage								
速比[1] Speed ratio		i		12	16	20	25	35	40	50	70	100
额定输出力矩(n_{1N}) Rated output torque		T_{2N}	Nm	208	290	290	330	300	330	330	300	230
紧急制动力矩 Emergency braking torque (在减速机工作寿命内允许1000次) (1000 times during the working life of the reducer)		T_{2NOT}	Nm	3倍额定输出力矩/3 Times rated output torque								
额定输入转速 (T2n, 20℃环境温度) Rated input speed (T2n, 20 ℃ ambient temperature)		n_{1N}	rpm	3000								
最大输入转速 Maximum input speed		n_{1max}	rpm	6000								
空载力矩 (n1=3000rpm, 20℃环境温度) No-load torque (n1 = 3000 RPM, 20 ℃ambient temperature)		T_{012}	Nm	1.8	1.6	1.6	1.5	1.2	1	0.8	0.7	0.6
回程间隙 PS Backslash PS		j_t	Arcmin	⩽2								
回程间隙 P0 Backslash P0		j_t	Arcmin	⩽3								
回程间隙 P1 Backslash P1		j_t	Arcmin	⩽5								
回程间隙 P2 Backslash P2		j_t	Arcmin	⩽7								
扭转刚度 Torsional stiffness		C_{t21}	Nm/Arcmin	25								
最大轴向力[2] Maximum axial force		F_{2AMax}	N	5900								
最大径向力[2] Maximum radial force		F_{2RMax}	N	9200								
工作效率 Work efficiency		η	%	94								
工作寿命[3] Service life		L_h	h	30000								
噪音 (i=10和n1=3000rpm, 空载) Noise (i =10 and n1=3000rpm, no load)		L_{PA}	DB(A)	⩽63								
重量 Weight		m	Kg	10								
安装方向 Installation direction				任意方向/Any direction								
使用温度[4] Operating temperature		°C		-10~90								
润滑方式 Lubrication method				终生润滑/Lifetime lubrication								
防护等级 Protection level				IP65								
转动惯量 Moment of inertia 按减速机输入直径(mm) Input diameter based on the reducer (mm)	19	J_1	$Kgcm^2$	0.7	0.7	0.7	0.7	0.7	0.7	0.6	0.5	0.5
	22	J_1	$Kgcm^2$	0.2	1.8	1.8	1.7	1.7	1.6	1.4	1.4	1.4
	24	J_1	$Kgcm^2$	2. 2	2.1	2.1	2	2	1.9	1.8	1.8	1.7

1.可选其他减速比
2.输出轴中心点
3.连续运转时, 使用寿命为10000h
4.对温度有特殊要求请与法斯顿联系

1.Optional other ratio
2.Output shaft center point
3.Service life of 10000h in continuous operation
4.For special requirements on temperature, please contact FASTON

减速机性能资料 REDUCER PERFORMANCE DATA

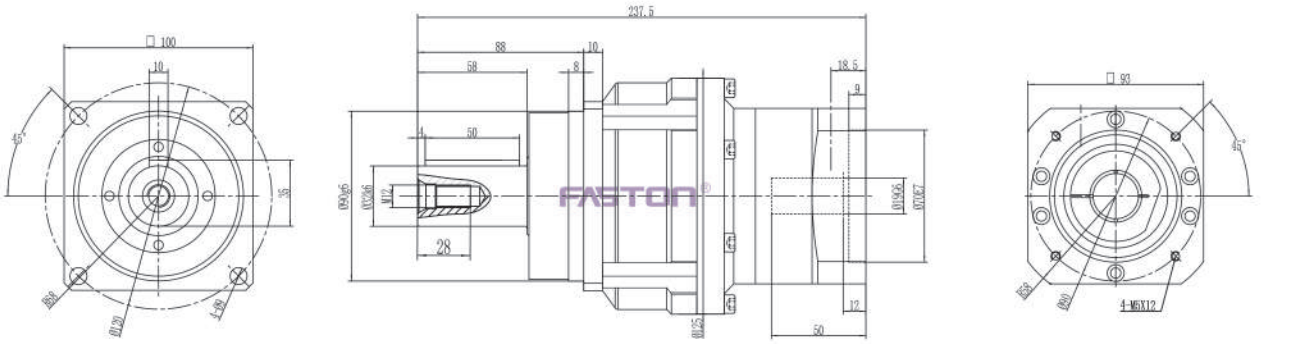

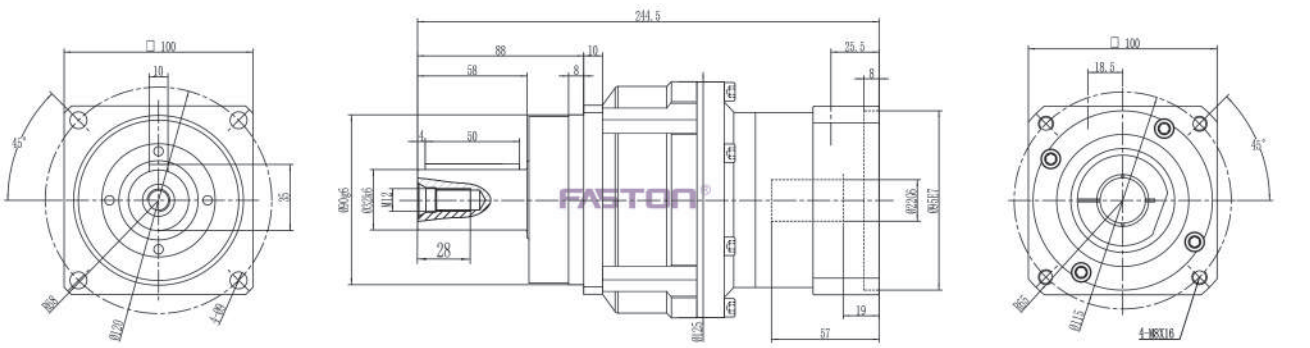

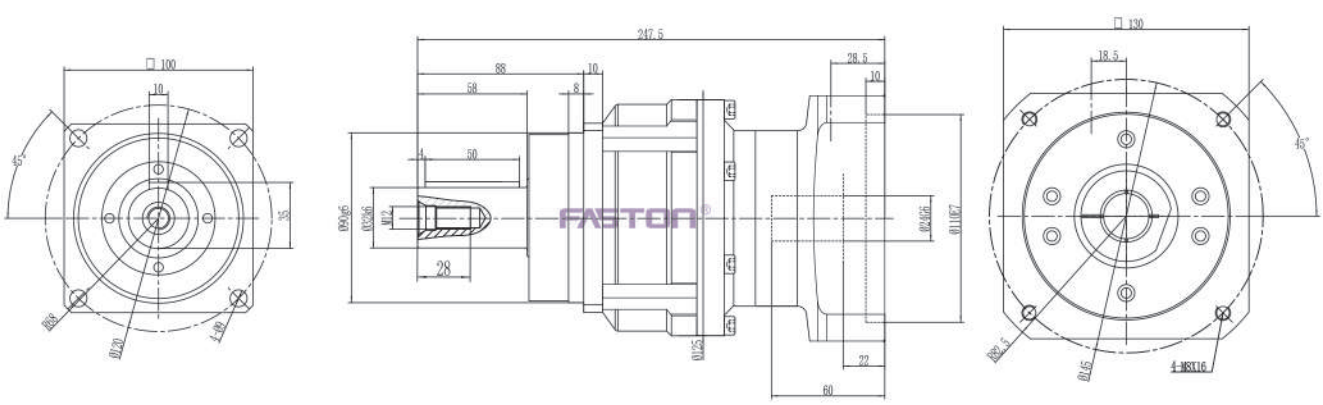

(1) 请参照马达轴径尺寸
(2) 马达轴最长长度, 如有特殊的马达轴尺寸, 请与法斯顿联络
(3) 减速机输入端尺寸, 依马达的法兰面而定

*如无适合的尺寸, 请与法斯顿联系

(1) Please refer to the motor shaft diameter
(2) Motor shaft length, for special motor shaft size, please contact FASTON
(3) Reducer input size, depending on the flange surface of the motor

* If no suitable size available, please contact FASTON

减速机性能资料 REDUCER PERFORMANCE DATA

FKFH142				单级/One-stage							
速比[1] Speed ratio		i		3	4	5	6	7	8	9	10
额定输出力矩(n_{1N}) Rated output torque		T_{2N}	Nm	342	542	650	550	550	500	450	450
紧急制动力矩 Emergency braking torque (在减速机工作寿命内允许1000次) (1000 times during the working life of the reducer)		T_{2NOT}	Nm	3倍额定输出力矩/3 Times rated output torque							
额定输入转速 (T2n, 20℃环境温度) Rated input speed (T2n, 20 ℃ ambient temperature)		n_{1N}	rpm	3000							
最大输入转速 Maximum input speed		n_{1max}	rpm	6000							
空载力矩 (n1=3000rpm, 20℃环境温度) No-load torque (n1 = 3000 RPM, 20 ℃ambient temperature)		T_{012}	Nm	8	6	4.7	4.5	3.5	2.5	2.5	2.5
回程间隙 PS Backslash PS		j_t	Arcmin	⩽1							
回程间隙 P0 Backslash P0		j_t	Arcmin	⩽2							
回程间隙 P1 Backslash P1		j_t	Arcmin	⩽3							
回程间隙 P2 Backslash P2		j_t	Arcmin	⩽5							
扭转刚度 Torsional stiffness		C_{t21}	Nm/Arcmin	54							
最大轴向力[2] Maximum axial force		F_{2AMax}	N	11000							
最大径向力[2] Maximum radial force		F_{2RMax}	N	14000							
工作效率 Work efficiency		η	%	97							
工作寿命[3] Service life		L_h	h	30000							
噪音 (i=10和n1=3000rpm, 空载) Noise (i =10 and n1=3000rpm, no load)		L_{PA}	DB(A)	⩽65							
重量 Weight		m	Kg	16							
安装方向 Installation direction				任意方向/Any direction							
使用温度[4] Operating temperature		°C		-10~90							
润滑方式 Lubrication method				终生润滑/Lifetime lubrication							
防护等级 Protection level				IP65							
转动惯量 Moment of inertia 按减速机输入直径(mm) Input diameter based on the reducer (mm)	24	J_1	$Kgcm^2$	10.5	8	8	7.2	7	6.5	5.8	5.5
	35	J_1	$Kgcm^2$	14.5	12	11	10	10	9.5	9.5	9
	42	J_1	$Kgcm^2$	26	25	24.5	24.1	23.5	23	22.5	22

1.可选其他减速比
2.输出轴中心点
3.连续运转时，使用寿命为10000h
4.对温度有特殊要求请与法斯顿联系

1.Optional other ratio
2.Output shaft center point
3.Service life of 10000h in continuous operation
4.For special requirements on temperature, please contact FASTON

减速机性能资料 REDUCER PERFORMANCE DATA

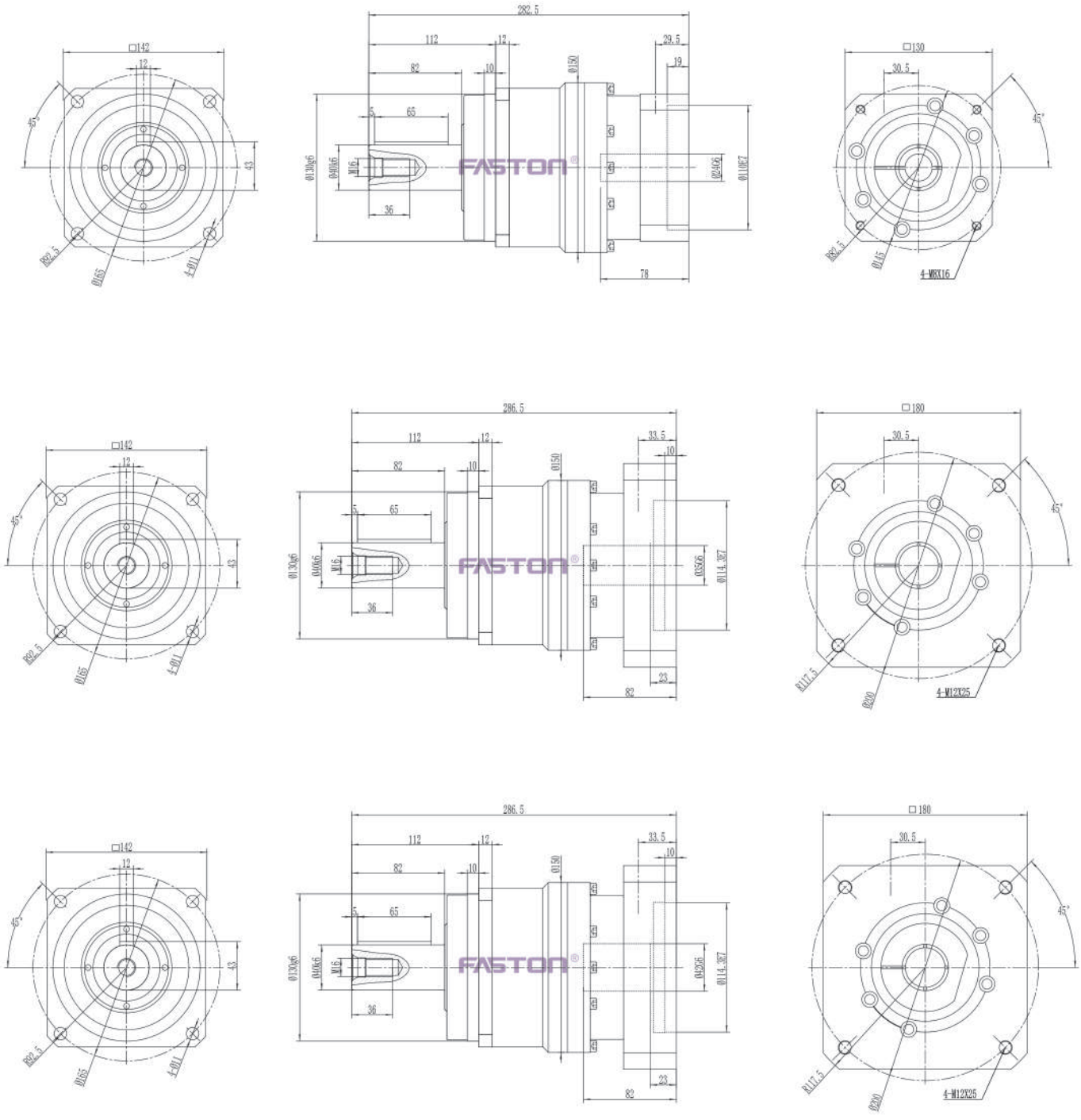

(1) 请参照马达轴径尺寸
(2) 马达轴最长长度, 如有特殊的马达轴尺寸, 请与法斯顿联络
(3) 减速机输入端尺寸, 依马达的法兰面而定

*如无适合的尺寸, 请与法斯顿联系

(1) Please refer to the motor shaft diameter
(2) Motor shaft length, for special motor shaft size, please contact FASTON
(3) Reducer input size, depending on the flange surface of the motor

* If no suitable size available, please contact FASTON

减速机性能资料 REDUCER PERFORMANCE DATA

FKFH142				双级/Double-stage								
速比[1] Speed ratio		i		12	16	20	25	35	40	50	70	100
额定输出力矩(n_{1N}) Rated output torque		T_{2N}	Nm	342	542	542	650	550	542	650	550	450
紧急制动力矩 Emergency braking torque (在减速机工作寿命内允许1000次) (1000 times during the working life of the reducer)		T_{2NOT}	Nm	3倍额定输出力矩/3 Times rated output torque								
额定输入转速 (T2n, 20℃环境温度) Rated input speed (T2n, 20 ℃ ambient temperature)		n_{1N}	rpm	3000								
最大输入转速 Maximum input speed		n_{1max}	rpm	6000								
空载力矩 (n1=3000rpm, 20℃环境温度) No-load torque (n1 = 3000 RPM, 20 ℃ambient temperature)		T_{012}	Nm	3.5	2.8	2.6	2.2	2.0	1.9	1.8	1.6	1.5
回程间隙 PS Backslash PS		j_t	Arcmin	⩽2								
回程间隙 P0 Backslash P0		j_t	Arcmin	⩽3								
回程间隙 P1 Backslash P1		j_t	Arcmin	⩽5								
回程间隙 P2 Backslash P2		j_t	Arcmin	⩽7								
扭转刚度 Torsional stiffness		C_{t21}	Nm/Arcmin	54								
最大轴向力[2] Maximum axial force		F_{2AMax}	N	11000								
最大径向力[2] Maximum radial force		F_{2RMax}	N	14000								
工作效率 Work efficiency		η	%	94								
工作寿命[3] Service life		L_h	h	30000								
噪音 (i=10和n1=3000rpm, 空载) Noise (i =10 and n1=3000rpm, no load)		L_{PA}	DB(A)	⩽65								
重量 Weight		m	Kg	20								
安装方向 Installation direction				任意方向/Any direction								
使用温度[4] Operating temperature		°C		-10~90								
润滑方式 Lubrication method				终生润滑/Lifetime lubrication								
防护等级 Protection level				IP65								
转动惯量 Moment of inertia 按减速机输入直径(mm) Input diameter based on the reducer (mm)	19	J_1	$Kgcm^2$	2.6	2.2	2	1.7	1.7	1.6	1.4	1.4	1.4
	24	J_1	$Kgcm^2$	3.3	3.2	3	2.9	2.7	2.5	2.3	2.2	2
	35	J_1	$Kgcm^2$	14. 5	12	11	10	10	9.5	9.5	9	9

1.可选其他减速比
2.输出轴中心点
3.连续运转时, 使用寿命为10000h
4.对温度有特殊要求请与法斯顿联系

1.Optional other ratio
2.Output shaft center point
3.Service life of 10000h in continuous operation
4.For special requirements on temperature, please contact FASTON

减速机性能资料 REDUCER PERFORMANCE DATA

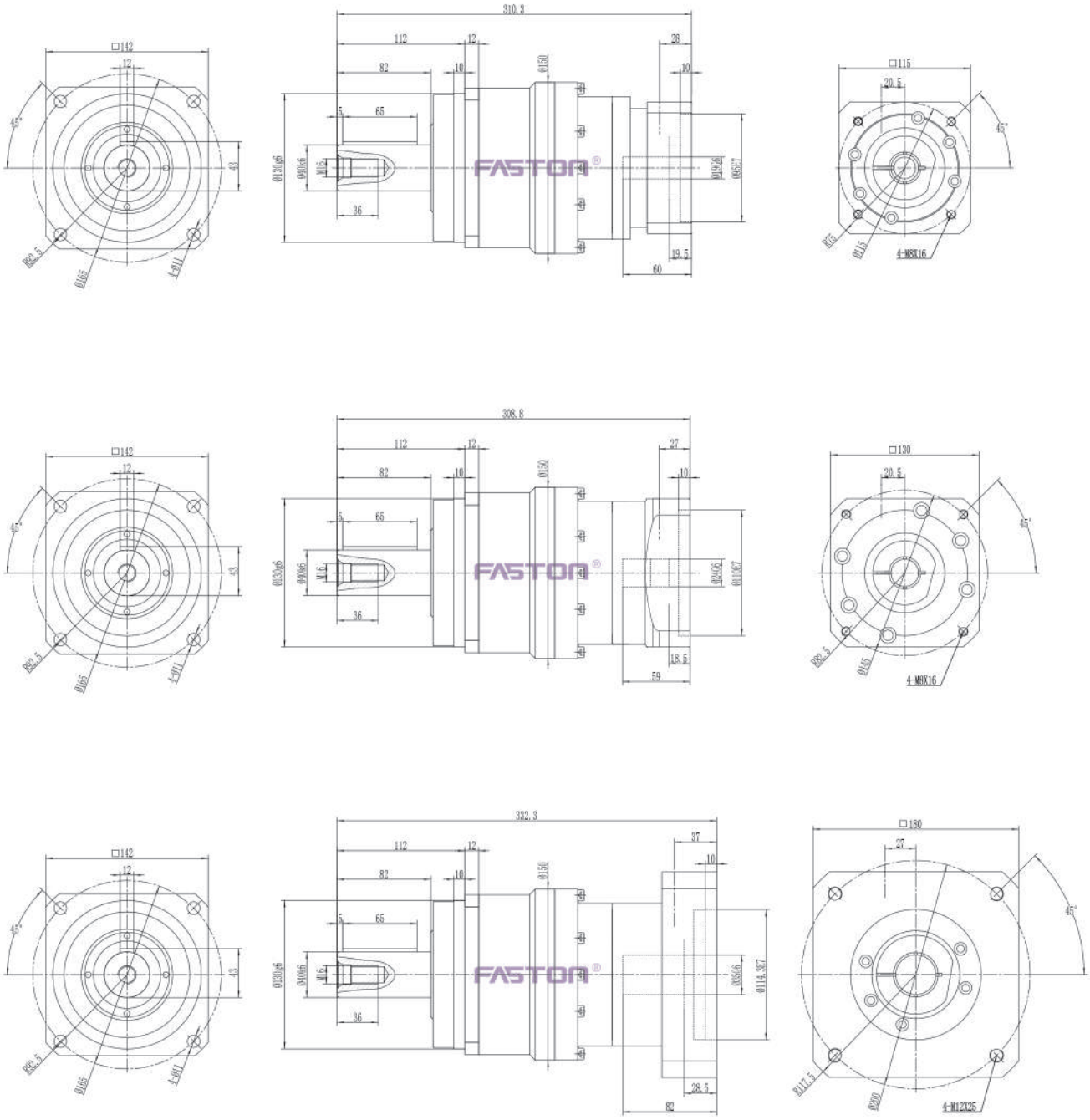

(1) 请参照马达轴径尺寸
(2) 马达轴最长长度, 如有特殊的马达轴尺寸, 请与法斯顿联络
(3) 减速机输入端尺寸, 依马达的法兰面而定

*如无适合的尺寸, 请与法斯顿联系

(1) Please refer to the motor shaft diameter
(2) Motor shaft length, for special motor shaft size, please contact FASTON
(3) Reducer input size, depending on the flange surface of the motor

* If no suitable size available, please contact FASTON

减速机性能资料 REDUCER PERFORMANCE DATA

FKFH180				单级/One-stage							
速比[1] Speed ratio		i		3	4	5	6	7	8	9	10
额定输出力矩(n_{1N}) Rated output torque		T_{2N}	Nm	750	1050	1200	1100	1100	1000	900	900
紧急制动力矩 Emergency braking torque (在减速机工作寿命内允许1000次) (1000 times during the working life of the reducer)		T_{2NOT}	Nm	3倍额定输出力矩/3 Times rated output torque							
额定输入转速 (T2n, 20℃环境温度) Rated input speed (T2n, 20 ℃ ambient temperature)		n_{1N}	rpm	3000							
最大输入转速 Maximum input speed		n_{1max}	rpm	6000							
空载力矩 (n1=3000rpm, 20℃环境温度) No-load torque (n1 = 3000 RPM, 20 ℃ambient temperature)		T_{012}	Nm	15	13	12	11	9	7.5	6.5	5.5
回程间隙 PS Backslash PS		j_t	Arcmin	⩽1							
回程间隙 P0 Backslash P0		j_t	Arcmin	⩽2							
回程间隙 P1 Backslash P1		j_t	Arcmin	⩽3							
回程间隙 P2 Backslash P2		j_t	Arcmin	⩽5							
扭转刚度 Torsional stiffness		C_{t21}	Nm/Arcmin	150							
最大轴向力[2] Maximum axial force		F_{2AMax}	N	15000							
最大径向力[2] Maximum radial force		F_{2RMax}	N	18000							
工作效率 Work efficiency		η	%	97							
工作寿命[3] Service life		L_h	h	30000							
噪音 (i=10和n1=3000rpm, 空载) Noise (i =10 and n1=3000rpm, no load)		L_{PA}	DB(A)	⩽67							
重量 Weight		m	Kg	31							
安装方向 Installation direction				任意方向/Any direction							
使用温度[4] Operating temperature		°C		-10~90							
润滑方式 Lubrication method				终生润滑/Lifetime lubrication							
防护等级 Protection level				IP65							
转动惯量 Moment of inertia 按减速机输入直径(mm) Input diameter based on the reducer (mm)	35	J_1	$Kgcm^2$	49	35	30	25	23	22	20	19
	42	J_1	$Kgcm^2$	52	41	37	36	35	32	30	28
	55	J_1	$Kgcm^2$	66	50	44	42	40	38	36	36

1.可选其他减速比
2.输出轴中心点
3.连续运转时，使用寿命为10000h
4.对温度有特殊要求请与法斯顿联系

1.Optional other ratio
2.Output shaft center point
3.Service life of 10000h in continuous operation
4.For special requirements on temperature, please contact FASTON

减速机性能资料 REDUCER PERFORMANCE DATA

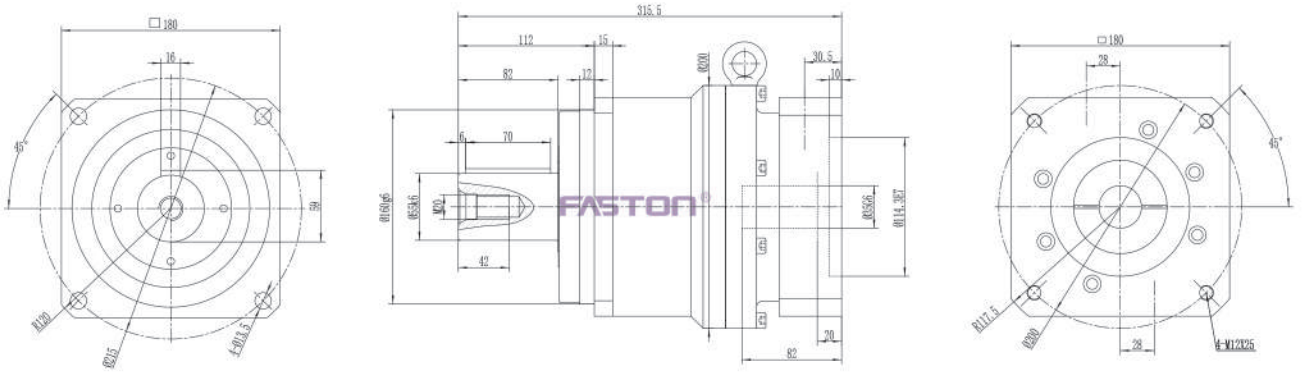

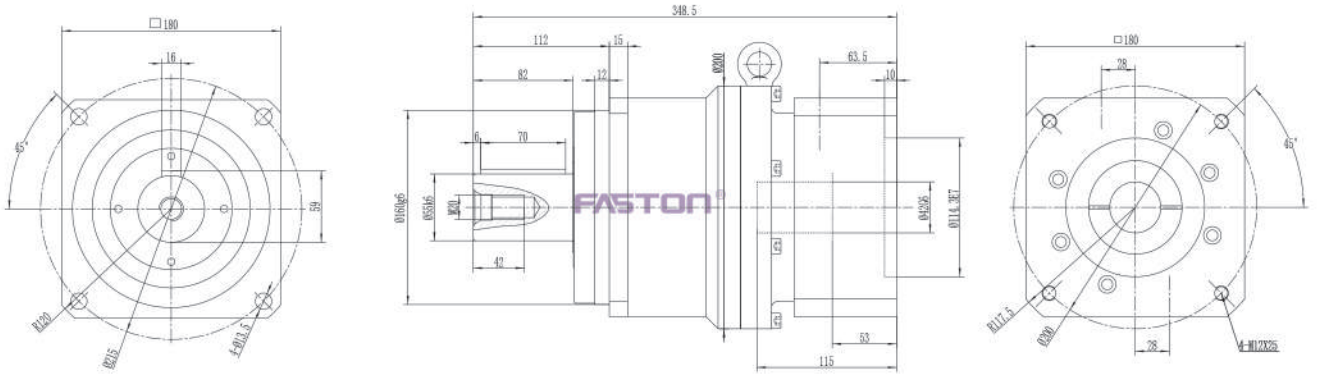

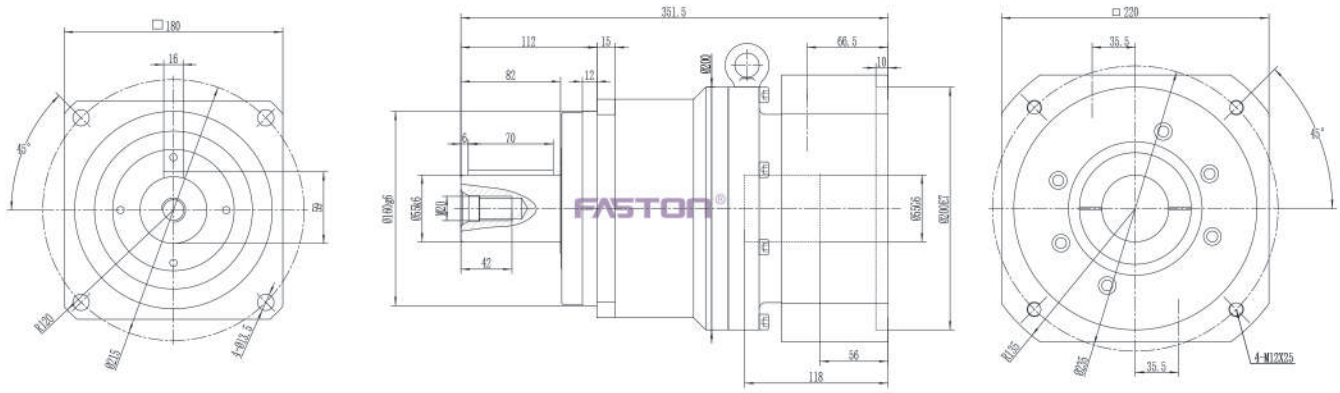

(1) 请参照马达轴径尺寸
(2) 马达轴最长长度, 如有特殊的马达轴尺寸, 请与法斯顿联络
(3) 减速机输入端尺寸, 依马达的法兰面而定

*如无适合的尺寸, 请与法斯顿联系

(1) Please refer to the motor shaft diameter
(2) Motor shaft length, for special motor shaft size, please contact FASTON
(3) Reducer input size, depending on the flange surface of the motor

* If no suitable size available, please contact FASTON

减速机性能资料 REDUCER PERFORMANCE DATA

FKFH180				双级/Double-stage								
速比[1] Speed ratio		i		12	16	20	25	35	40	50	70	100
额定输出力矩(n_{1N}) Rated output torque		T_{2N}	Nm	750	1050	1050	1200	1100	1020	1200	1100	900
紧急制动力矩 Emergency braking torque (在减速机工作寿命内允许1000次) (1000 times during the working life of the reducer)		T_{2NOT}	Nm	3倍额定输出力矩/3 Times rated output torque								
额定输入转速 (T2n, 20℃环境温度) Rated input speed (T2n, 20 ℃ ambient temperature)		n_{1N}	rpm	3000								
最大输入转速 Maximum input speed		n_{1max}	rpm	6000								
空载力矩 (n1=3000rpm, 20℃环境温度) No-load torque (n1 = 3000 RPM, 20 ℃ambient temperature)		T_{012}	Nm	14	11	11	9	9	8	7	6.8	5
回程间隙 PS Backslash PS		j_t	Arcmin	⩽2								
回程间隙 P0 Backslash P0		j_t	Arcmin	⩽3								
回程间隙 P1 Backslash P1		j_t	Arcmin	⩽5								
回程间隙 P2 Backslash P2		j_t	Arcmin	⩽7								
扭转刚度 Torsional stiffness		C_{t21}	Nm/Arcmin	150								
最大轴向力[2] Maximum axial force		F_{2AMax}	N	15000								
最大径向力[2] Maximum radial force		F_{2RMax}	N	18000								
工作效率 Work efficiency		η	%	94								
工作寿命[3] Service life		L_h	h	30000								
噪音 (i=10和n1=3000rpm, 空载) Noise (i =10 and n1=3000rpm, no load)		L_{PA}	DB(A)	⩽67								
重量 Weight		m	Kg	39								
安装方向 Installation direction				任意方向/Any direction								
使用温度[4] Operating temperature		°C		-10~90								
润滑方式 Lubrication method				终生润滑/Lifetime lubrication								
防护等级 Protection level				IP65								
转动惯量 Moment of inertia 按减速机输入直径(mm) Input diameter based on the reducer (mm)	24	J_1	$Kgcm^2$	9.5	9	8.8	8.2	7.9	7.5	6.8	6.2	5.5
	32	J_1	$Kgcm^2$	12	11.4	10.9	10.2	9.8	9.7	9.3	9.0	8.5
	35	J_1	$Kgcm^2$	13	12.1	11	10.5	10.2	10	9.9	9.8	9.5

1.可选其他减速比
2.输出轴中心点
3.连续运转时，使用寿命为10000h
4.对温度有特殊要求请与法斯顿联系

1.Optional other ratio
2.Output shaft center point
3.Service life of 10000h in continuous operation
4.For special requirements on temperature, please contact FASTON

减速机性能资料 REDUCER PERFORMANCE DATA

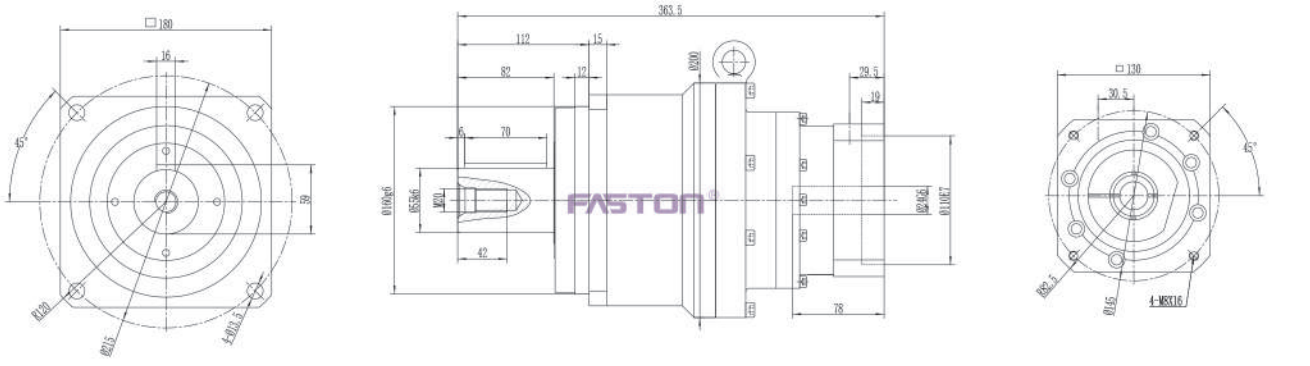

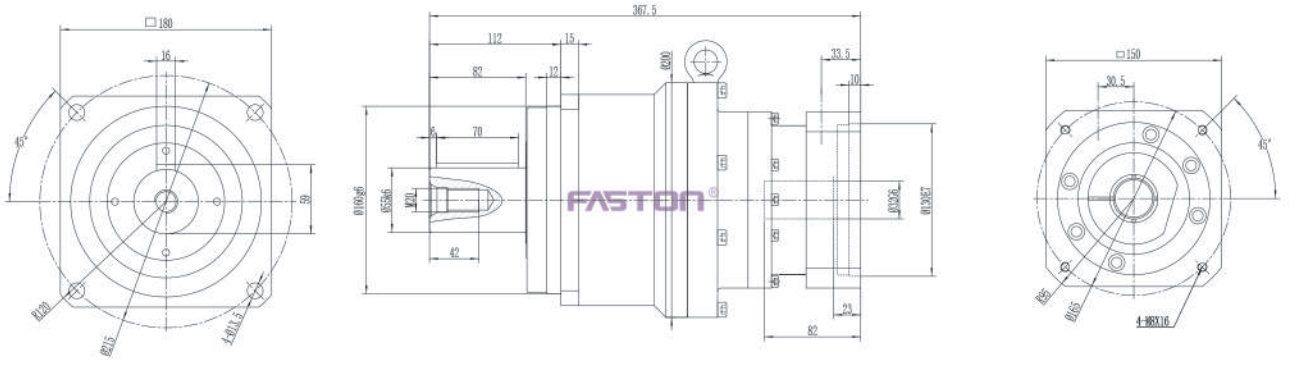

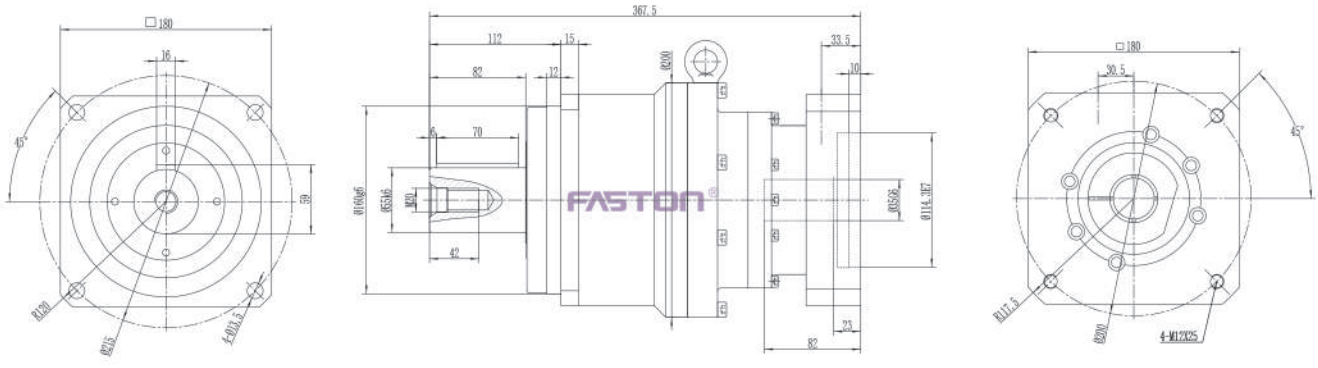

(1) 请参照马达轴径尺寸
(2) 马达轴最长长度, 如有特殊的马达轴尺寸, 请与法斯顿联络
(3) 减速机输入端尺寸, 依马达的法兰面而定

*如无适合的尺寸, 请与法斯顿联系

(1) Please refer to the motor shaft diameter
(2) Motor shaft length, for special motor shaft size, please contact FASTON
(3) Reducer input size, depending on the flange surface of the motor

* If no suitable size available, please contact FASTON

减速机性能资料 REDUCER PERFORMANCE DATA

FKFH210				单级/One-stage							
速比(1) Speed ratio		i		3	4	5	6	7	8	9	10
额定输出力矩(n_{1N}) Rated output torque		T_{2N}	Nm	1140	1700	2000	1800	1800	1600	1500	1500
紧急制动力矩 Emergency braking torque (在减速机工作寿命内允许1000次) (1000 times during the working life of the reducer)		T_{2NOT}	Nm	3倍额定输出力矩/3 Times rated output torque							
额定输入转速 (T2n, 20°C环境温度) Rated input speed (T2n, 20 °C ambient temperature)		n_{1N}	rpm	2000							
最大输入转速 Maximum input speed		n_{1max}	rpm	4000							
空载力矩(n1=3000rpm, 20°C环境温度) No-load torque (n1 = 3000 RPM, 20 °Cambient temperature)		T_{012}	Nm	33	22	17	8	6	5	4.5	3.5
回程间隙 PS Backslash PS		j_t	Arcmin	⩽1							
回程间隙 P0 Backslash P0		j_t	Arcmin	⩽2							
回程间隙 P1 Backslash P1		j_t	Arcmin	⩽3							
回程间隙 P2 Backslash P2		j_t	Arcmin	⩽5							
扭转刚度 Torsional stiffness		C_{t21}	Nm/Arcmin	225							
最大轴向力(2) Maximum axial force		F_{2AMax}	N	21000							
最大径向力(2) Maximum radial force		F_{2RMax}	N	32000							
工作效率 Work efficiency		η	%	97							
工作寿命(3) Service life		L_h	h	30000							
噪音(i=10和n1=3000rpm, 空载) Noise (i =10 and n1=3000rpm, no load)		L_{PA}	DB(A)	⩽70							
重量 Weight		m	Kg	48							
安装方向 Installation direction				任意方向/Any direction							
使用温度(4) Operating temperature		°C		-10~90							
润滑方式 Lubrication method				终生润滑/Lifetime lubrication							
防护等级 Protection level				IP65							
转动惯量 Moment of inertia 按减速机输入直径(mm) Input diameter based on the reducer (mm)	42	J_1	$Kgcm^2$	80	70	68	65	52	52	45	40
	55	J_1	$Kgcm^2$	130	95	77	75	65	65	60	55

1.可选其他减速比
2.输出轴中心点
3.连续运转时，使用寿命为10000h
4.对温度有特殊要求请与法斯顿联系

1.Optional other ratio
2.Output shaft center point
3.Service life of 10000h in continuous operation
4.For special requirements on temperature, please contact FASTON

减速机性能资料 REDUCER PERFORMANCE DATA

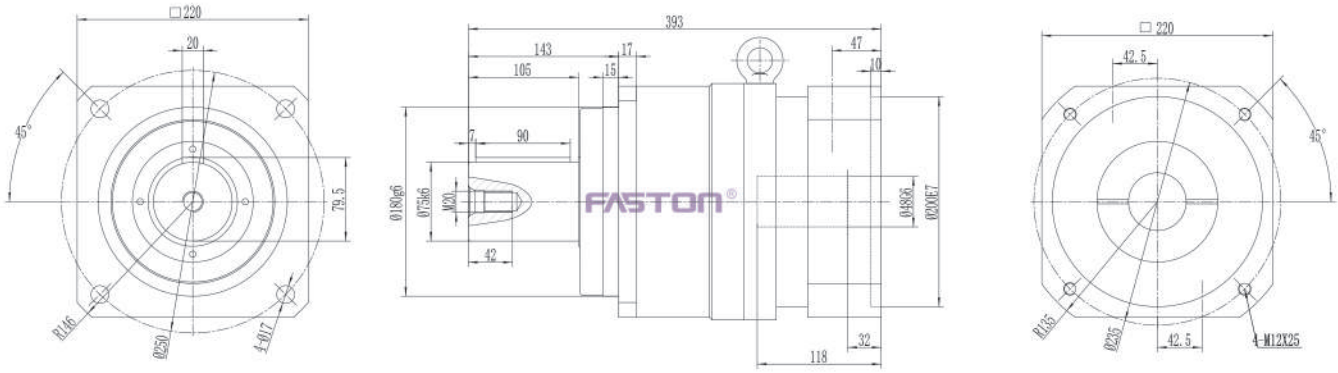

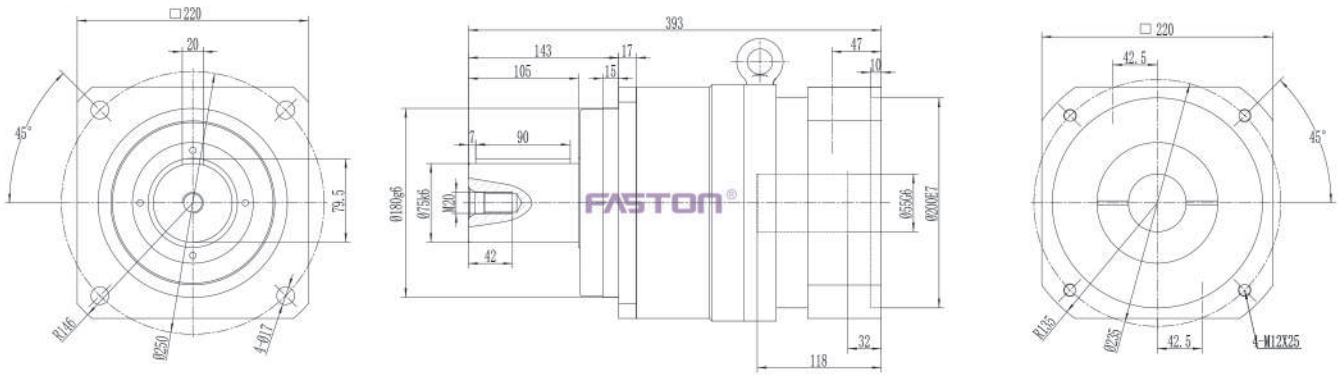

(1) 请参照马达轴径尺寸
(2) 马达轴最长长度, 如有特殊的马达轴尺寸, 请与法斯顿联络
(3) 减速机输入端尺寸, 依马达的法兰面而定

*如无适合的尺寸, 请与法斯顿联系

(1) Please refer to the motor shaft diameter
(2) Motor shaft length, for special motor shaft size, please contact FASTON
(3) Reducer input size, depending on the flange surface of the motor

* If no suitable size available, please contact FASTON

减速机性能资料 REDUCER PERFORMANCE DATA

FKFH210				双级/Double-stage								
速比(1) Speed ratio		i		12	16	20	25	35	40	50	70	100
额定输出力矩(n_{1N}) Rated output torque		T_{2N}	Nm	1140	1700	1700	2000	1800	1700	2000	1800	1500
紧急制动力矩 Emergency braking torque (在减速机工作寿命内允许1000次) (1000 times during the working life of the reducer)		T_{2NOT}	Nm	3倍额定输出力矩/3 Times rated output torque								
额定输入转速 (T2n, 20°C环境温度) Rated input speed (T2n, 20 °C ambient temperature)		n_{1N}	rpm	2000								
最大输入转速 Maximum input speed		n_{1max}	rpm	4000								
空载力矩(n1=3000rpm, 20°C环境温度) No-load torque (n1 = 3000 RPM, 20 °Cambient temperature)		T_{012}	Nm	14	11	11	9	9	8	7	6.8	5
回程间隙 PS Backslash PS		j_t	Arcmin	⩽2								
回程间隙 P0 Backslash P0		j_t	Arcmin	⩽3								
回程间隙 P1 Backslash P1		j_t	Arcmin	⩽5								
回程间隙 P2 Backslash P2		j_t	Arcmin	⩽7								
扭转刚度 Torsional stiffness		C_{t21}	Nm/Arcmin	225								
最大轴向力(2) Maximum axial force		F_{2AMax}	N	21000								
最大径向力(2) Maximum radial force		F_{2RMax}	N	32000								
工作效率 Work efficiency		η	%	94								
工作寿命(3) Service life		L_h	h	30000								
噪音(i=10和n1=3000rpm, 空载) Noise (i =10 and n1=3000rpm, no load)		L_{PA}	DB(A)	⩽70								
重量 Weight		m	Kg	62								
安装方向 Installation direction				任意方向/Any direction								
使用温度(4) Operating temperature		°C		-10~90								
润滑方式 Lubrication method				终生润滑/Lifetime lubrication								
防护等级 Protection level				IP65								
转动惯量 Moment of inertia 按减速机输入直径(mm) Input diameter based on the reducer (mm)	35	J_1	$Kgcm^2$	18	16	15.5	14	14	13	12	10.8	9.5
	42	J_1	$Kgcm^2$	30	28	27	26.5	25.5	24	23	21	19.5

1.可选其他减速比
2.输出轴中心点
3.连续运转时, 使用寿命为10000h
4.对温度有特殊要求请与法斯顿联系

1.Optional other ratio
2.Output shaft center point
3.Service life of 10000h in continuous operation
4.For special requirements on temperature, please contact FASTON

减速机性能资料 REDUCER PERFORMANCE DATA

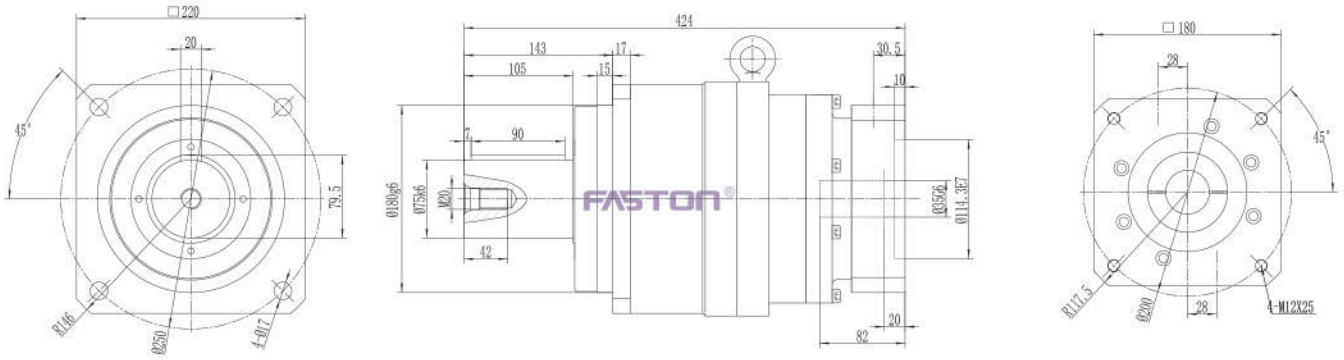

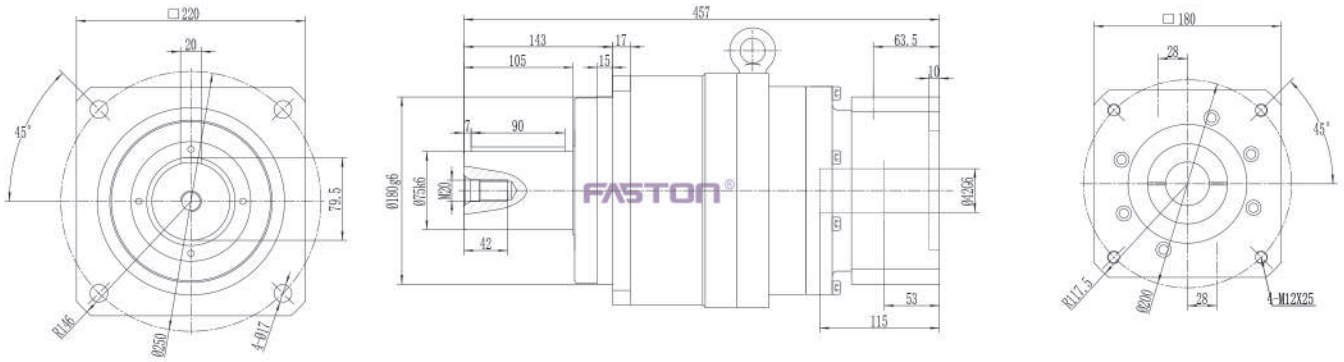

(1) 请参照马达轴径尺寸
(2) 马达轴最长长度, 如有特殊的马达轴尺寸, 请与法斯顿联络
(3) 减速机输入端尺寸, 依马达的法兰面而定

*如无适合的尺寸, 请与法斯顿联系

(1) Please refer to the motor shaft diameter
(2) Motor shaft length, for special motor shaft size, please contact FASTON
(3) Reducer input size, depending on the flange surface of the motor

* If no suitable size available, please contact FASTON